HEID ANTRIEBSTECHNIK
Produktion & Handel GmbH

LKC-S

Electromagnetic Stationary Field Multi-Disc Clutch

Basic construction with thoroughgoing clutch hub.

For oil operation, coil voltage 24 V DC

- In version with hardened steel discs.
- With inner lubrication for high duty load conditions.
- Further technical particulars on request.
- Vertical mounting only when ordered with application guidelines.

Heid multi disc clutches LKC-S are comparable regarding technical data and dimensions with multi disc clutches of ZF Friedrichshafen AG listed in the table.

Most of the clutches LKC-S documented in the data sheet can be amended according to order specification and so brought into line with the version to be replaced.

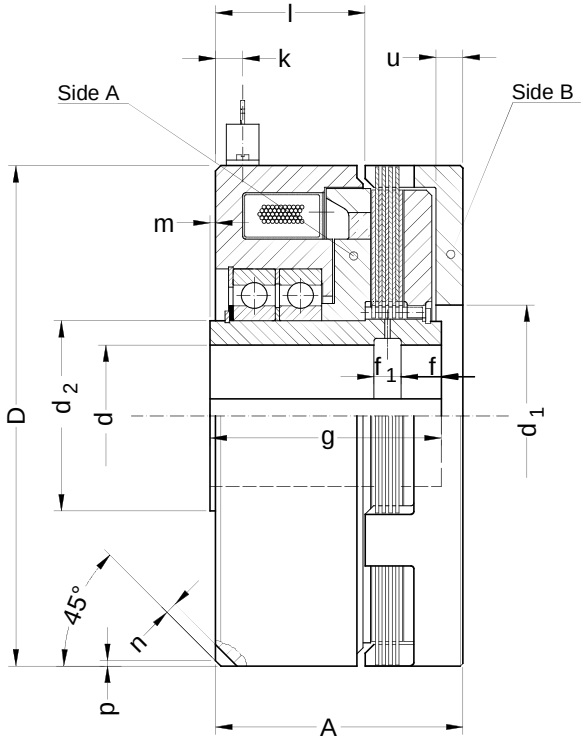

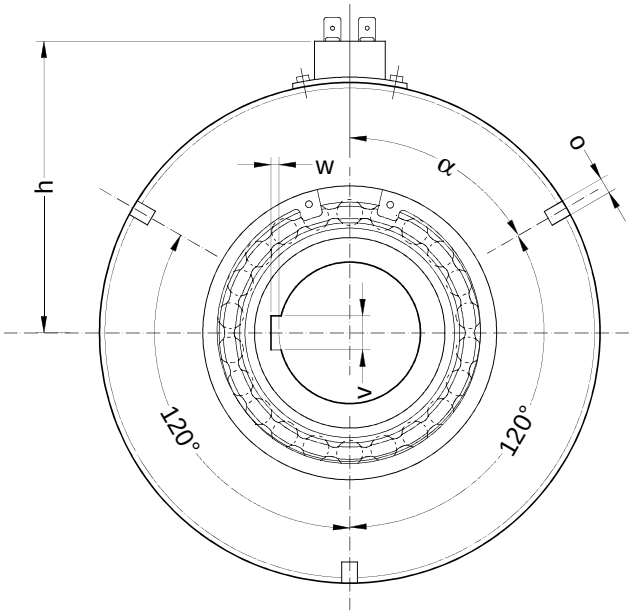

Data and Dimensions		LKC 0,5S	LKC 1S	LKC 2S	LKC 5S	LKC 10S	LKC 25S	LKC 30S	LKC 40S	LKC 60S	LKC 80S	LKC 120S	LKC 160S	LKC 250S
comparable to ZF Type:		EKR 0,5	EKR 1	EKR 2	EKR 5	EKR 10	EKR 20	EKR 30 A	EKR 40 A	EKR 60 A	EKR 80 A	EKR 120A	EKR 160	EKR 250
Static torque	Nm	10	20	40	100	200	400	600	800	1100	1800	2400	3000	4500
Dynamic torque	Nm	5	10	20	50	100	200	300	400	600	1000	1300	1600	2500
Speed maximum	min^{-1}	4500	4500	4000	3800	3800	3500	3500	3500	3000	3000	2500	2000	2000
Engagement time	ms	120	170	220	280	360	450	530	600	750	900	1100	1300	1700
Disengagement time	ms	40	50	70	100	110	200	220	250	300	380	400	540	750
Coil power consumption at 20 °C	W	17	25	31	37	56	82	110	82	110	130	160	230	270
Mass moment of inertia side A	10^{-3} kgm^2	0,15	0,33	0,73	1,75	4,5	12,3	11,0	19,0	34,5	71,0	98,0	188	280
Mass moment of inertia side B	10^{-3} kgm^2	0,13	0,25	0,51	1,6	3,0	7,4	8,2	14,5	27,5	50	66	148	235
Mass (weight) ~	kg	1,1	1,5	2,0	3,4	5,4	9,7	9,2	14,8	19,0	27,1	29,7	48,7	60,6
A	mm	38,5	51	56	63	73	82,5	91	94,5	103	110,5	112	131	149
ø D	mm	70	82	95	114	134	166	166	195	210	240	258	295	310
ø d H7	mm	14	18	30	34	42	52	55	65	70	80	100	98	98
ø d_1 H7	mm	24	30	45	50	60	70	60	70	75	90	120	140	140
ø d_2	mm	20	25	40	45	55	65	70	80	90	90	100	110,5	123,0
f	mm	-	-	7	10	12	13	12	10,5	11,5	13,5	12,5	14	18,5
f_1	mm	-	-	8	9	10	12	19	18	18	19,5	21	30	33
g	mm	34,5	46,5	52	58,5	68	76	84	83,5	91	98	99,5	117	131,5
h	mm	-	57	63,5	73	83	99	99	114	121	136	145	164	171
k	mm	-	9	7	7	7	9	10	10	10	10	10	10	10
l	mm	26	34,5	35,5	37,5	44	49	52,5	52,5	57,5	61	61	65,5	74
m	mm	0,5	1	1,5	1,5	1,5	1,5	0,5	1	2	2	2	3	3
n	mm	3,5	4	4	4	5	6	6	8	8	10	10	12	12
$o^{+0,2}$	mm	6	6	6	8	8	8	8	12	12	12	12	14	14
p	mm	1,5	2	2	2	2	2	3	3	3	3	3	3	3
v x w	mm	5 x 1,3	5 x 1,3	8 x 1,7	10 x 2,1	12 x 2,1	16 x 2,6	16 x 2,6	18 x 3,1	20 x 4,1	22 x 4,1	28 x 5,1	28 x 5,1	28 x 5,1
α	°	1)	1)	60	60	60	60	60	60	60	60	60	60	60